1	Stepper
2	**Arm Left**
3	Base Cross
4	Bar
5	Rod
6	Arm Right

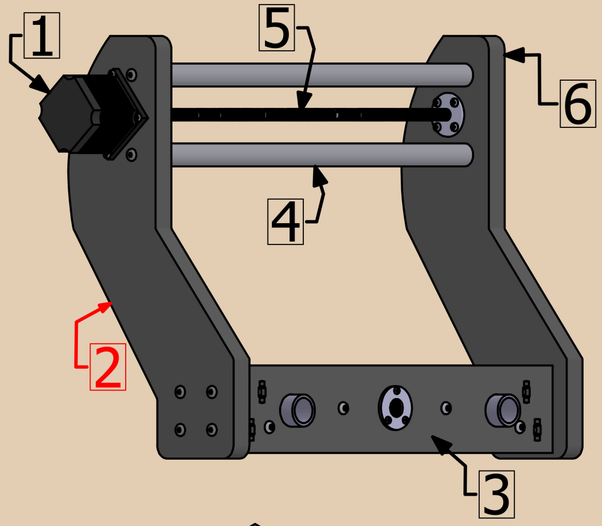

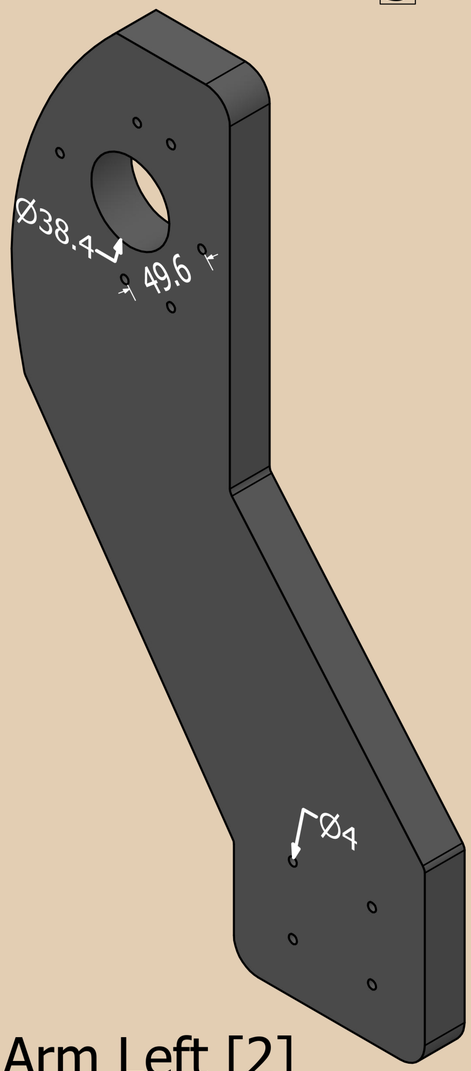

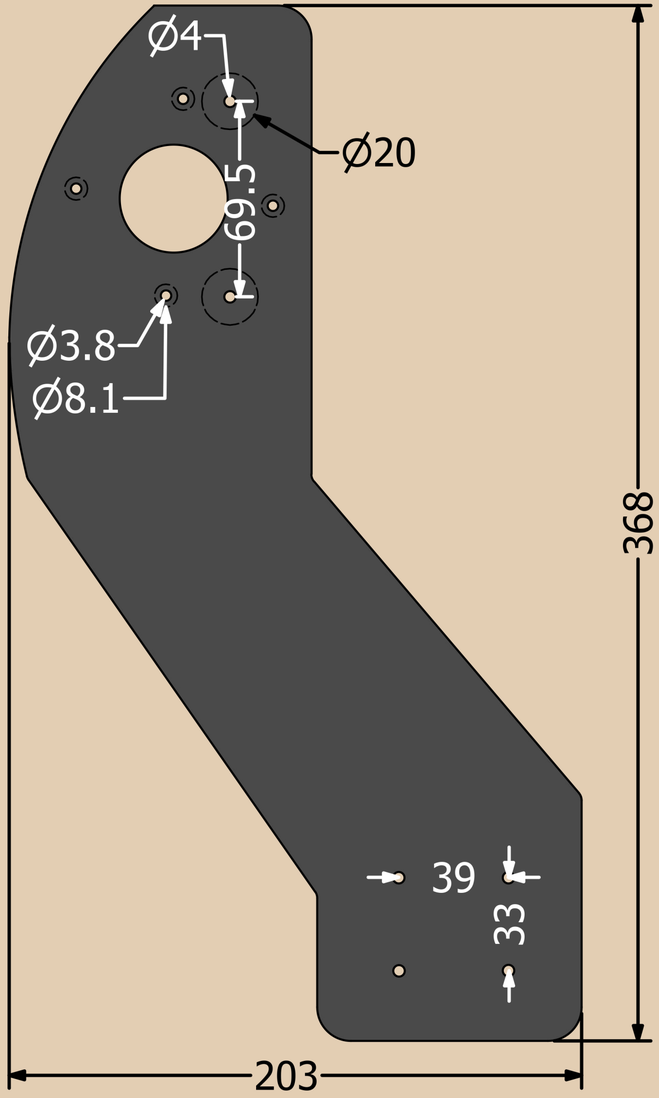



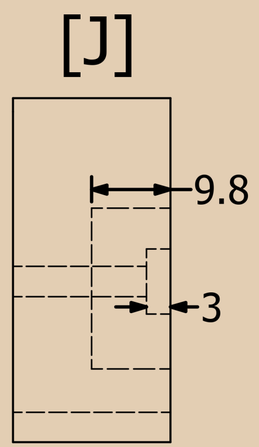

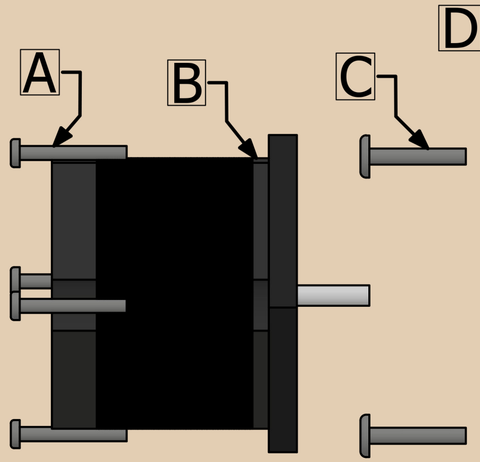



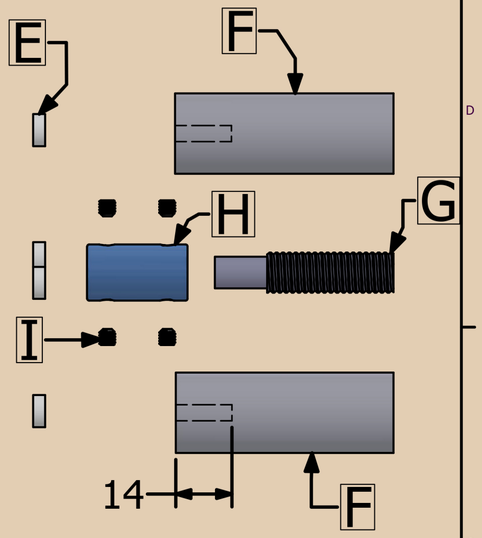

A	M3.5 x 26.6 Bolt	4
B	Stepper	1
C	M4 x 24 Bolt	2
D	Arm Left	1
E	M3.5 Nut	4
F	20mm Steel Rod	2
G	9mm Threaded Rod	1
H	Coupling	1
I	M4x4mm Set Screw	4

Arm Left [2]

Drawn By: Andrew Reichenbach