Y-Gantry

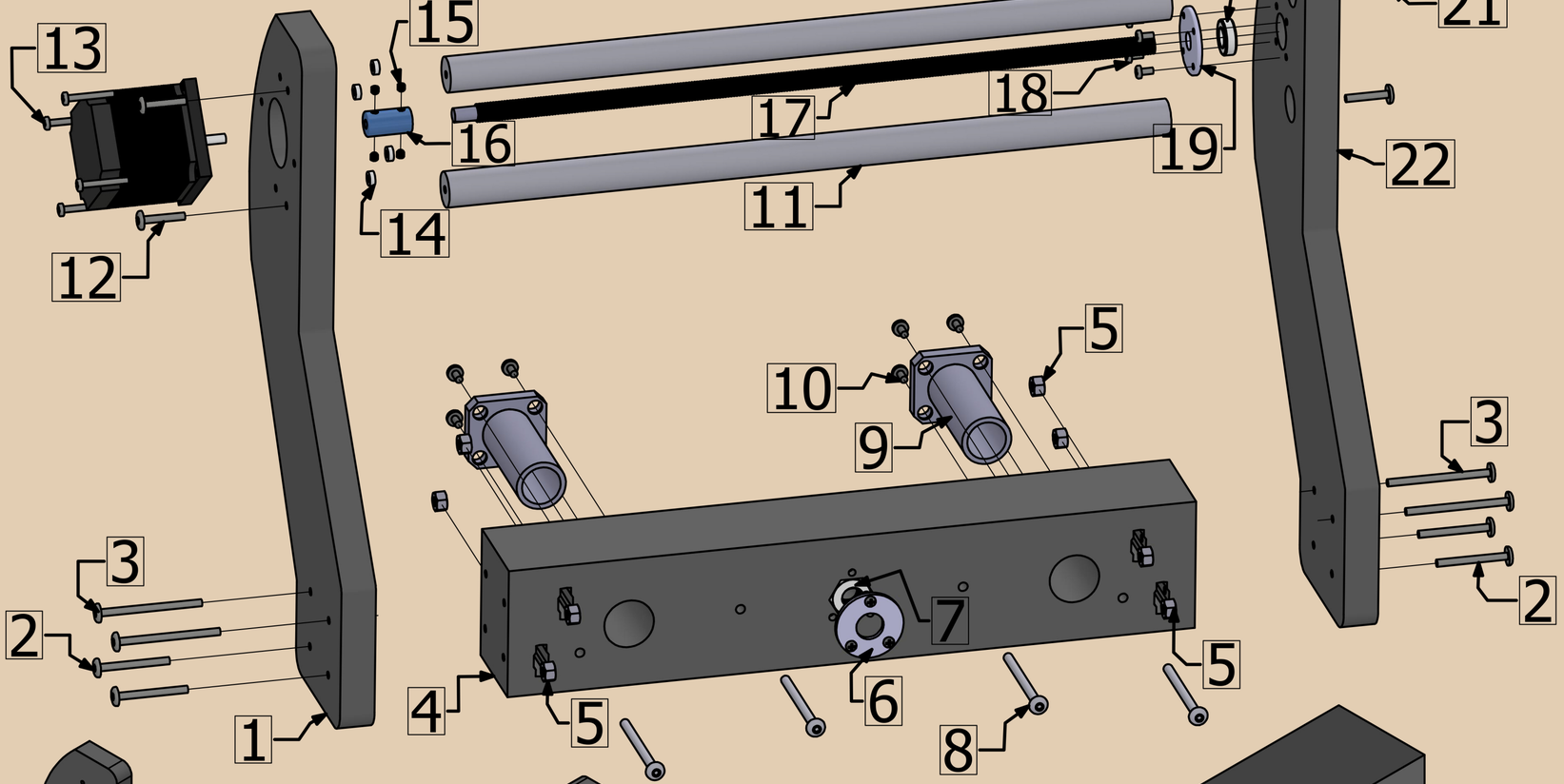

-	Part	QTY
1	Arm Left	1
2	M4x40 Bolt	4
3	M4x58 Bolt	3
4	Base	1
5	M4 Nut	12
6	Faceplate	1
7	9/16 Nut	1
8	M5 x 65 Bolt	4
9	Bearing	2
10	M4 x 8 Bolt	8
11	M20 x 410 Rod	2
12	Bolt	2
13	Bolt	4
14	4mm Washer Nut	4
15	Set Screw	4
16	Coupler	1
17	Threaded Rod	1
18	Bolt	4
19	Faceplate	1
20	Bearing	1
21	Bolt	2
22	Arm Right	1

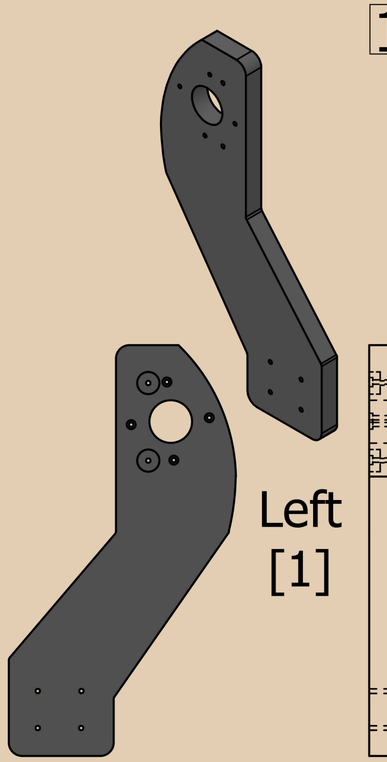

Left
[1]

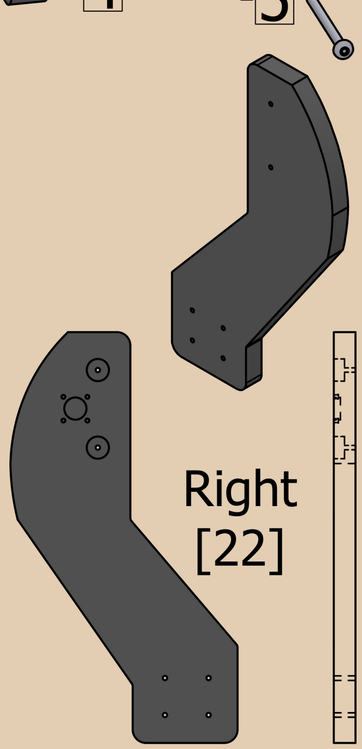

Right
[22]

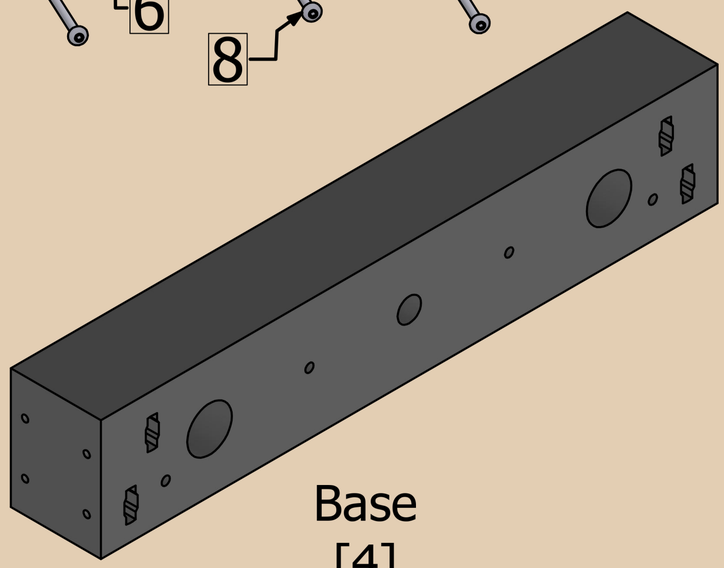

Base
[4]

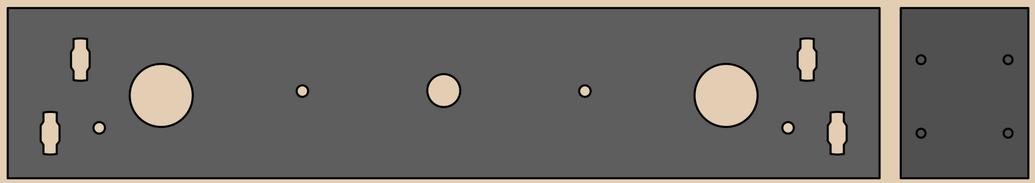

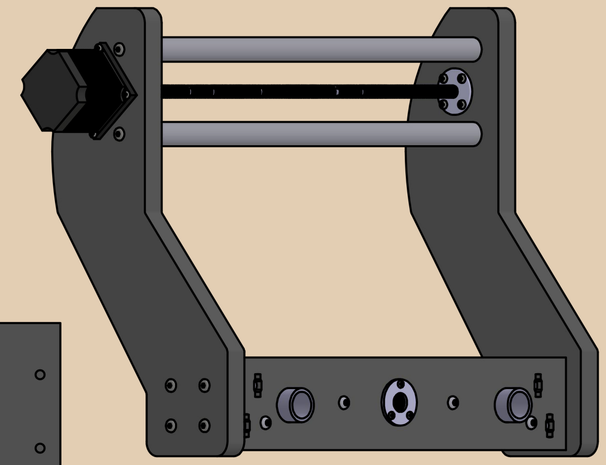

Drawn By: Andrew Reichenbach