X Gantry Top

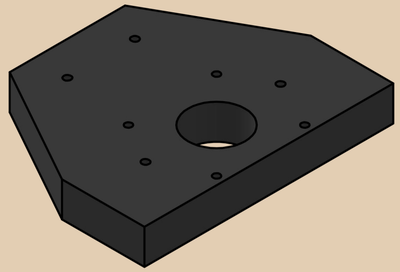

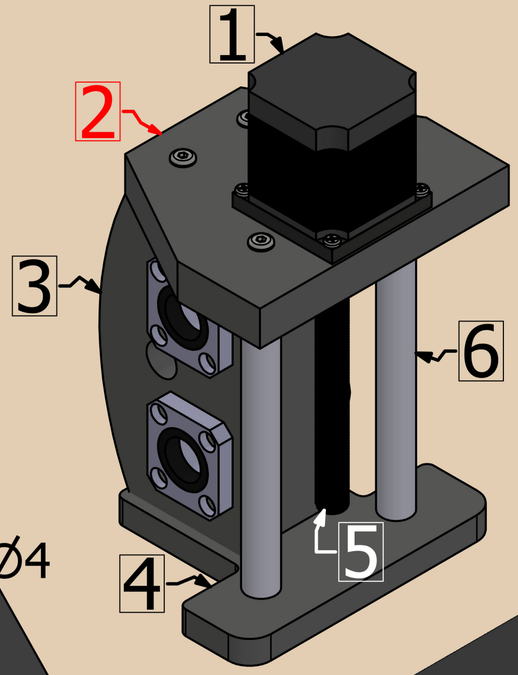

1	Stepper
2	X_Gantry_Top
3	X_Gantry_Middle
4	X_Gantry_Bottom
5	Threaded Rod
6	16mm Bar

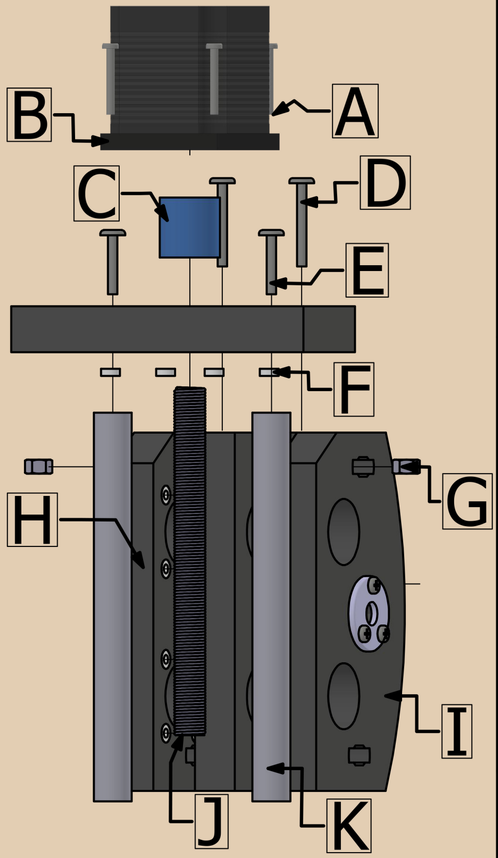

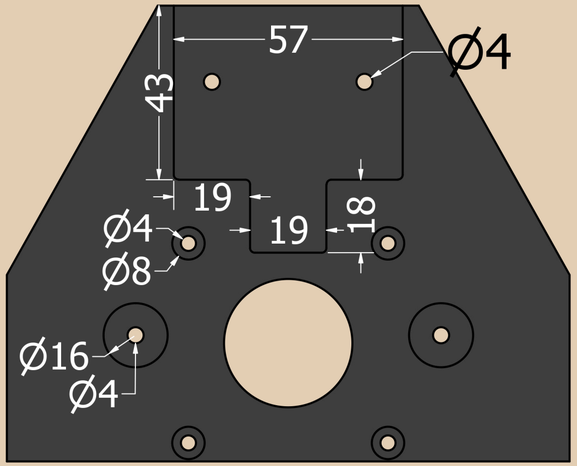

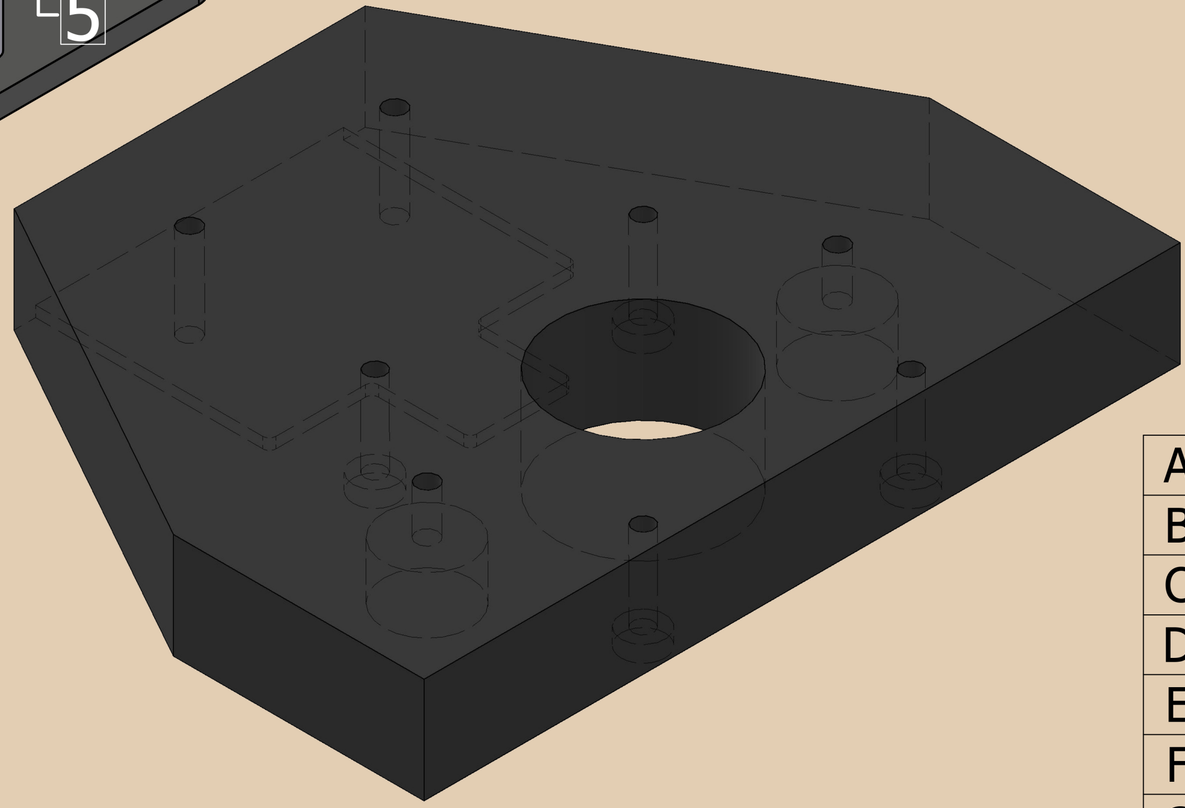

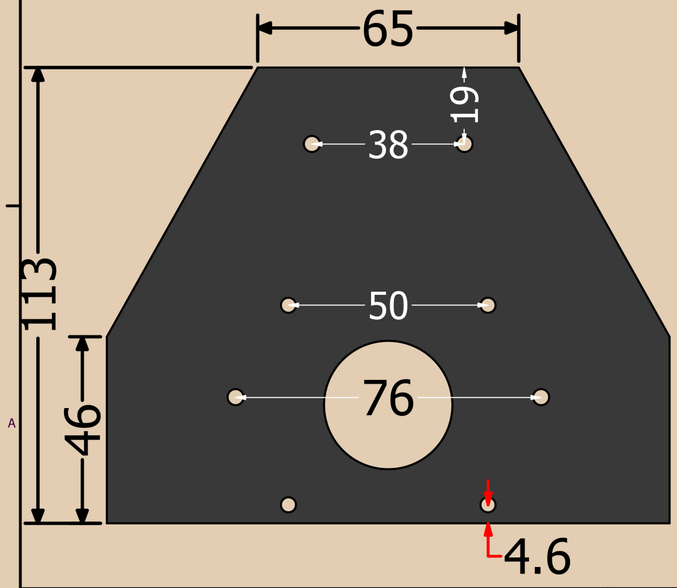

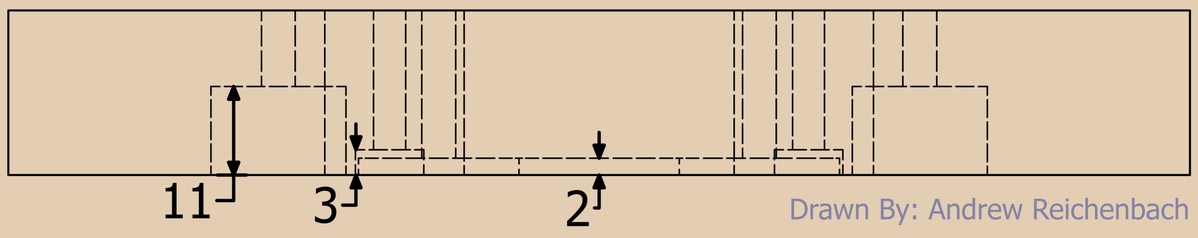

A	M3.5 x 28 Bolt	4
B	Stepper	1
C	Coupling	1
D	M4 x 25 Bolt	2
E	M3 x 16 Bolt	2
F	M4 Washer	4
G	M4 Locking Nut	4
H	Middle Left	1
I	Middle Right	1
J	Threaded Rod	1
K	Steel Rod	2

Drawn By: Andrew Reichenbach