1	Stepper
2	X_Gantry_Top
3	X_Gantry_Middle
4	X_Gantry_Bottom
5	Threaded Rod
6	16mm Bar

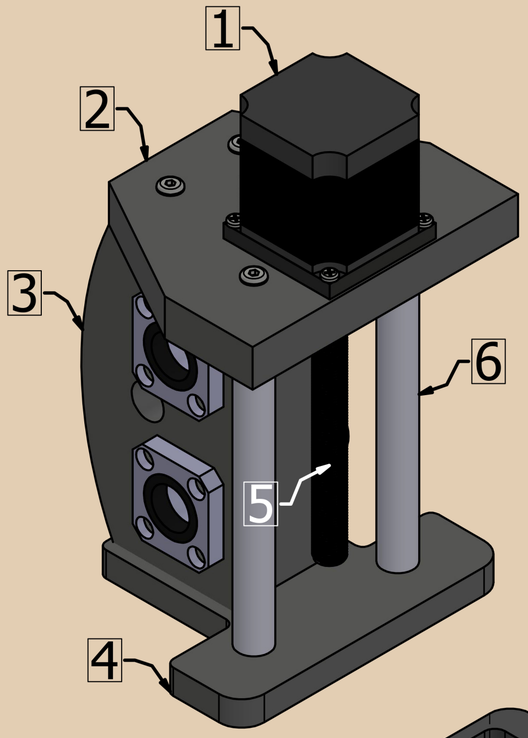

X Gantry Bottom

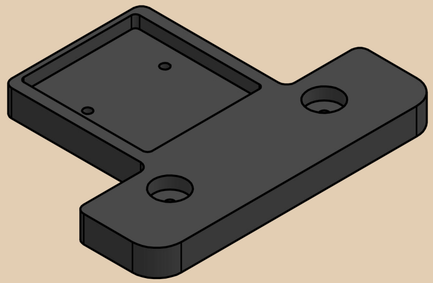

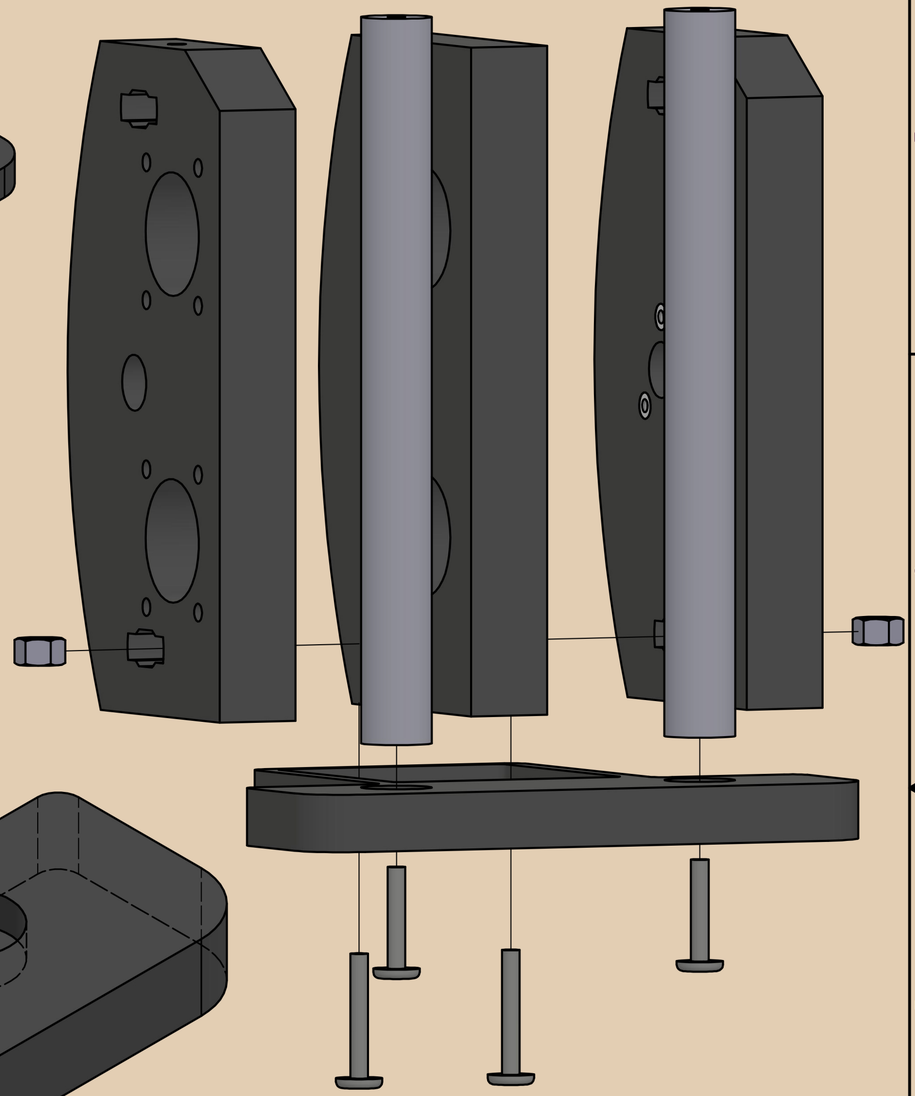

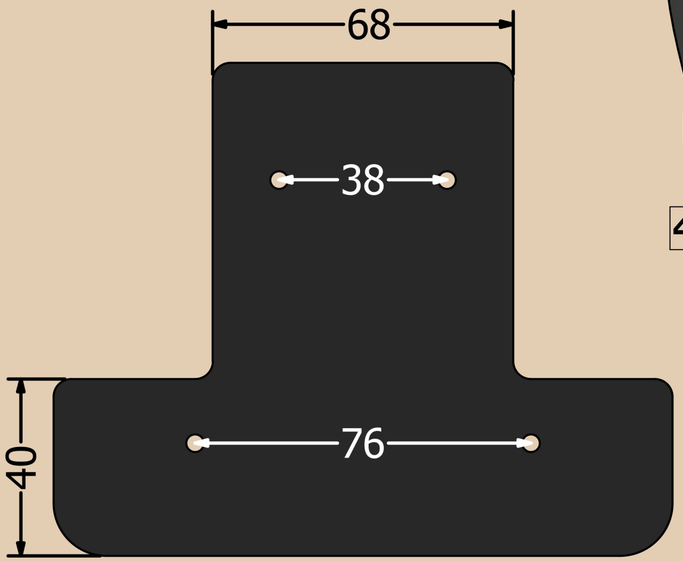

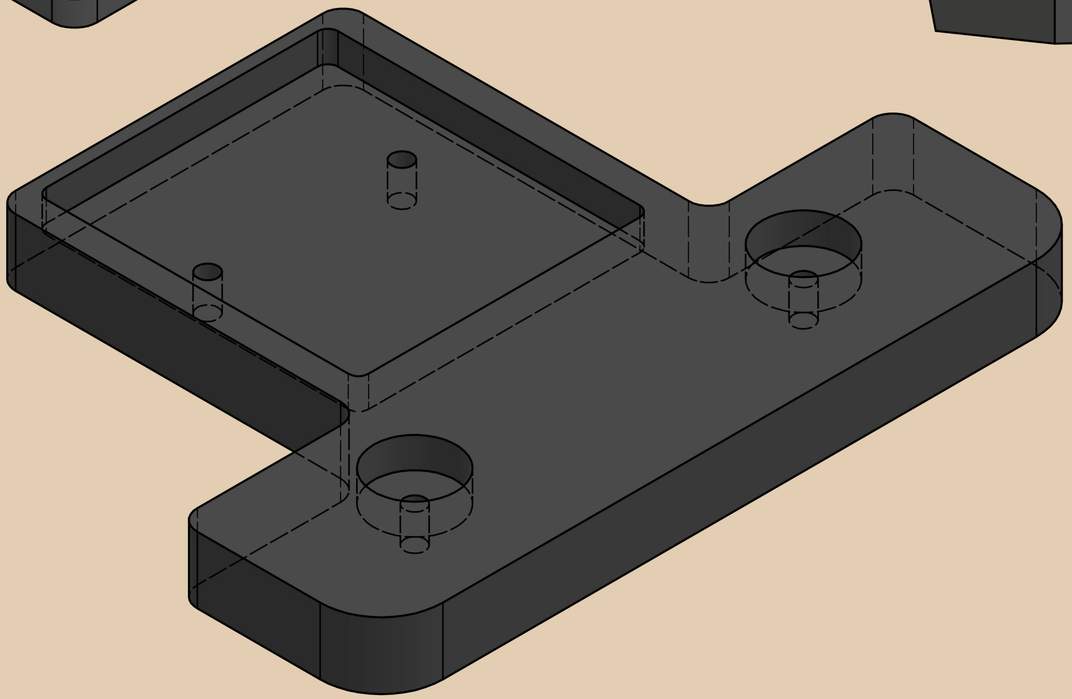

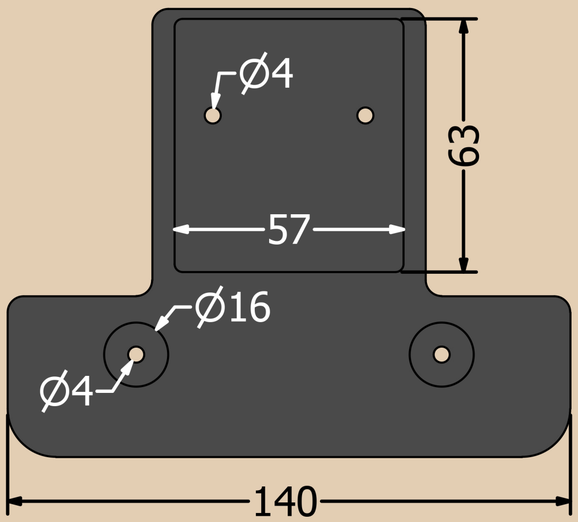

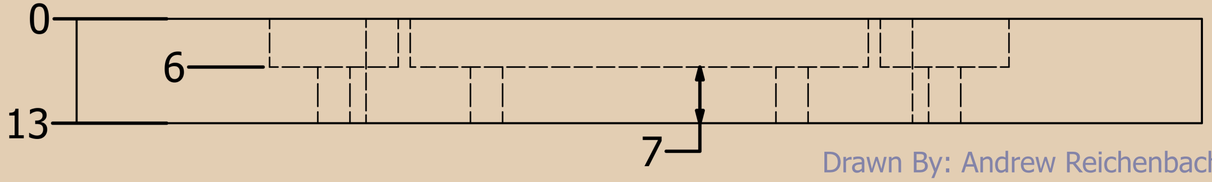

Drawn By: Andrew Reichenbach

-	Label	QTY
A	Bolt	2
B	Bolt	2
C	X_Gantry_Bottom	1
D	16mm x 220 Rod	2
E	1/4-20 Locking Nut	2
F	Middle_Left	1
G	Middle_Middle	1
H	Middle Right	1