Router Mount [11]

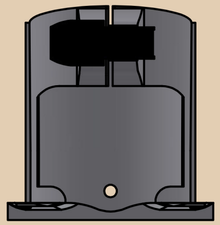

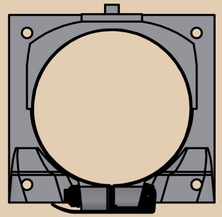

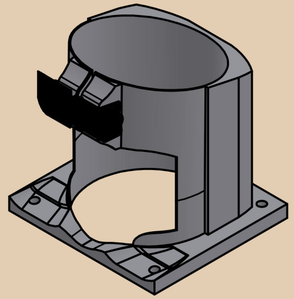

Printed Mount [4]



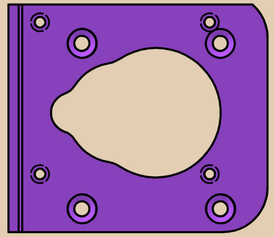

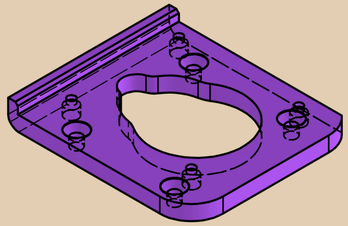

Steel Mount [5]

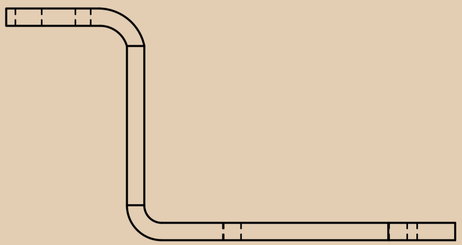

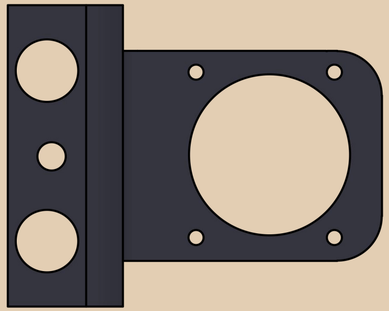

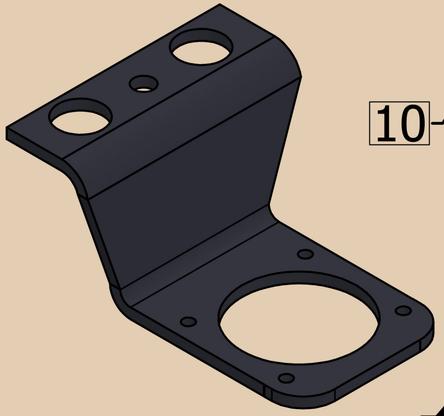

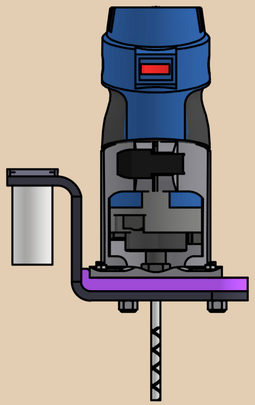

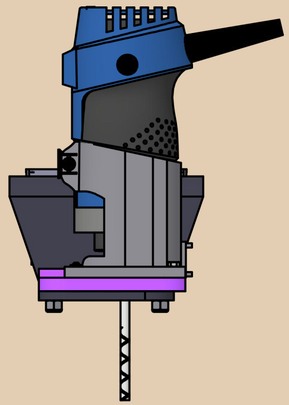

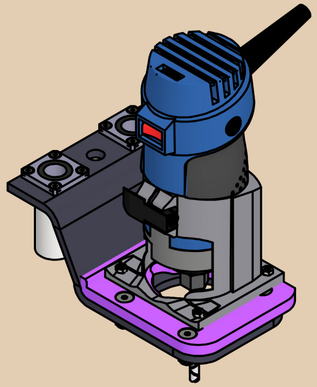

Z-Gantry

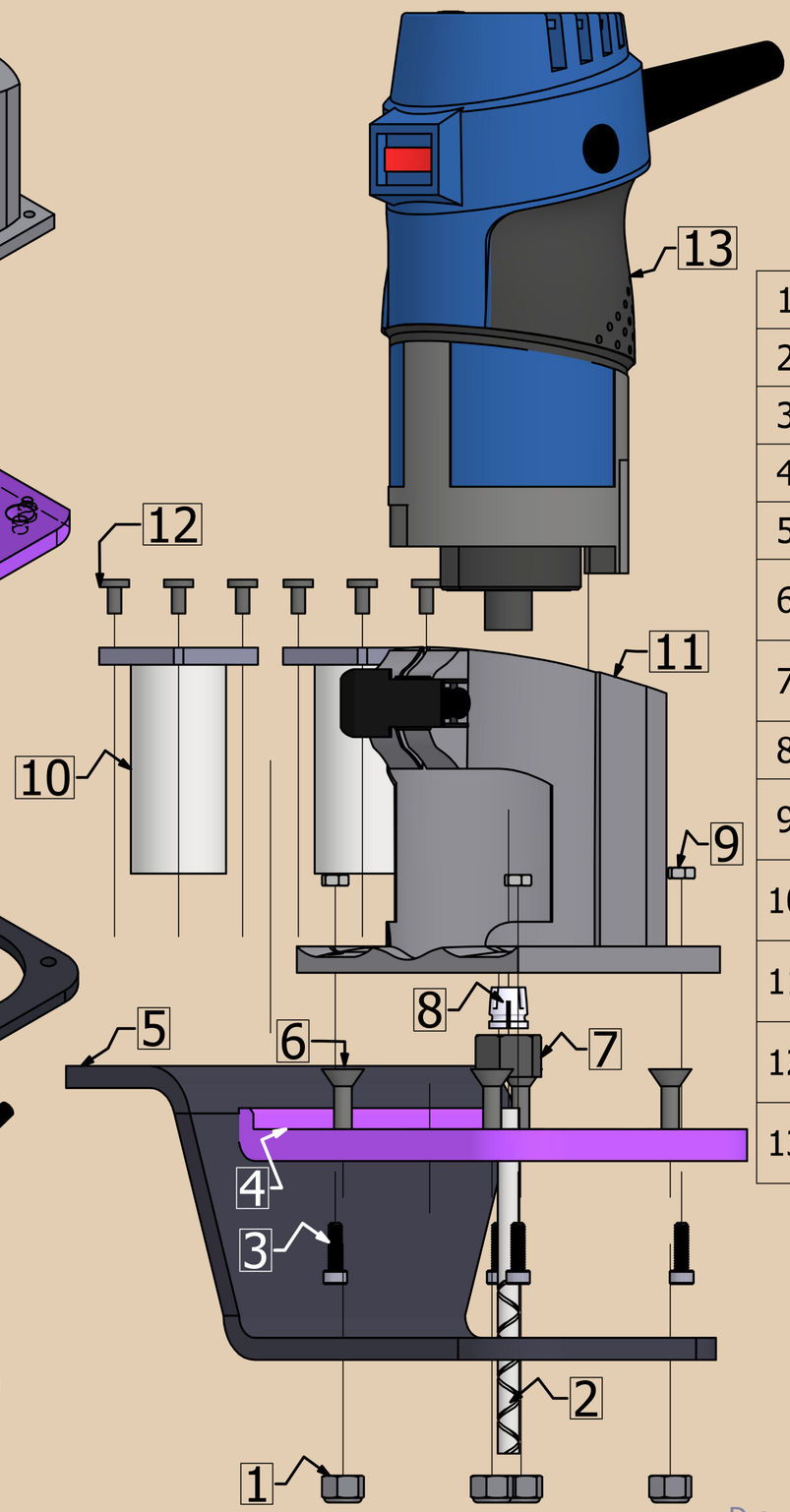

1	1/4 20 Nut [x4]
2	Endmill
3	M4 x 14 Bolt
4	Printed Mount
5	Steel Mount
6	1/4-20 Tapered Bolt
7	Collet Nut
8	Collet
9	M4 Nut
10	Bearing [x2]
11	Router Mount
12	M3 x 8 Bolt [x8]
13	Router

Drawn By: Andrew Reichenbach