1	Endstop Block Short
2	M5 x 31 Hex Bolt [4]
3	Limit Switch (7397K21) [2]
4	HGR20 Linear Rail Assembly 650mm
5	M5 Bolt Caps [18]
6	M5 x 13 Hex Bolt [5]
7	M5 x 20 Hex Bolt [2]
8	HGR15R 344mm Linear Rail
9	M5 x 16 Hex Bolt
10	M7 x 7 Hex Bolt
11	HBLFSNK6 [Modified]
12	M5 TNuts [4]
13	H568 50100 125mm
14	40 Tooth 3M Gear
15	M4 Grub Screw [2]
16	M3 x 4 Grub Screw [2]
17	20 Tooth 3M Gear
18	GT Cable 80 Tooth
19	Stepper Motor Mount
20	M4 x 6 Hex Bolts [4]
21	Nema Stepper 57BYGH627
22	M5 x 10 Hex Bolts [4]
23	M6 x 34 Hex Bolts [6]
24	BK12 Block
25	1610 Ballscrew 700mm
26	BF12 Block
27	Steel Tubing 720mm
28	M7 x 8 Hex Bolts [12]

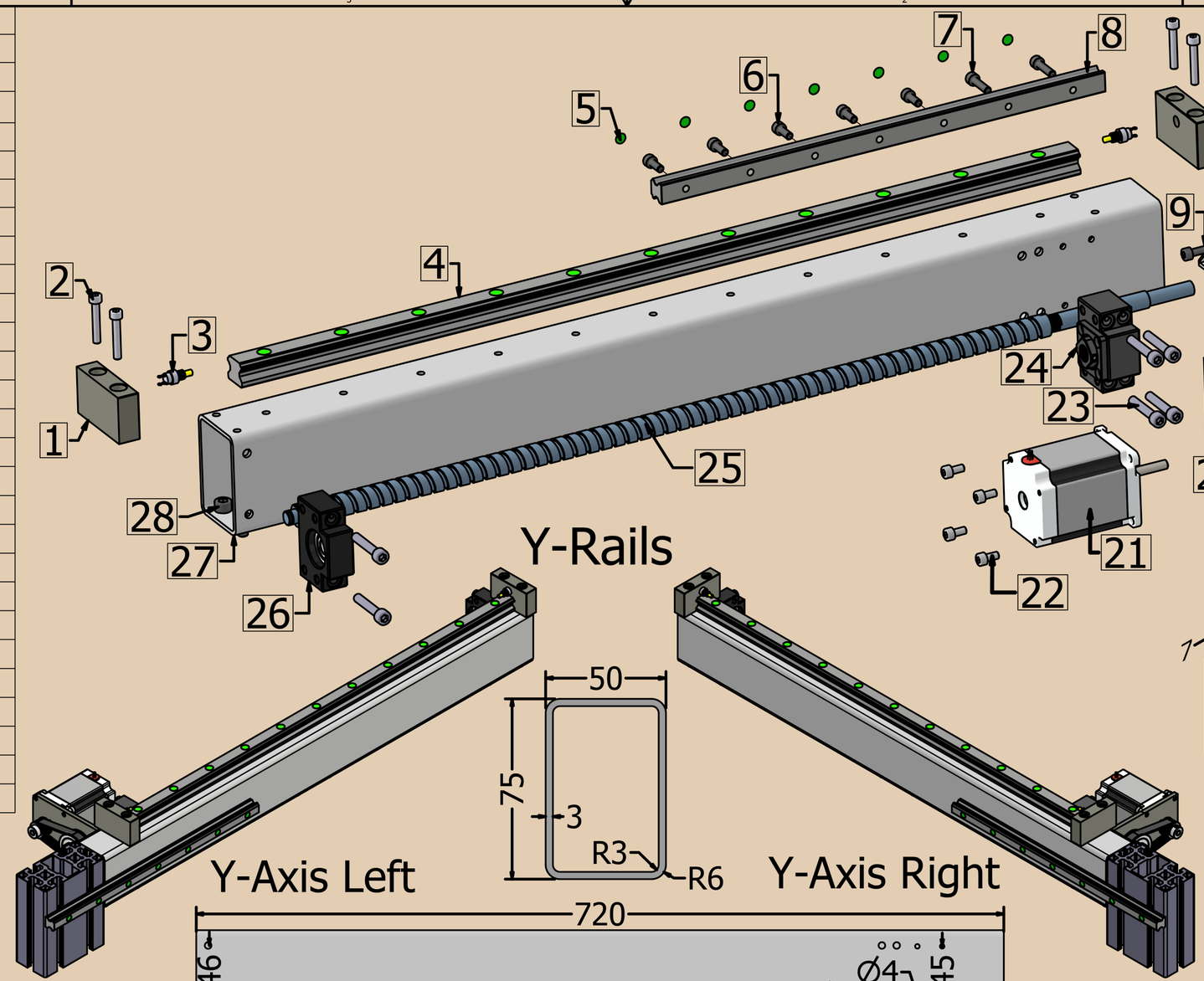

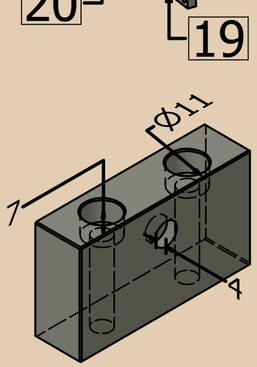

[1]

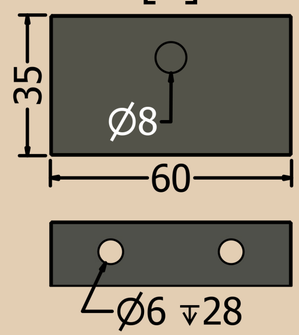

[11]

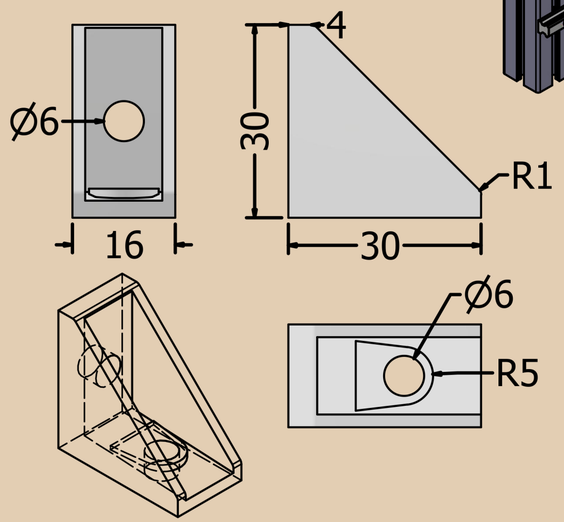

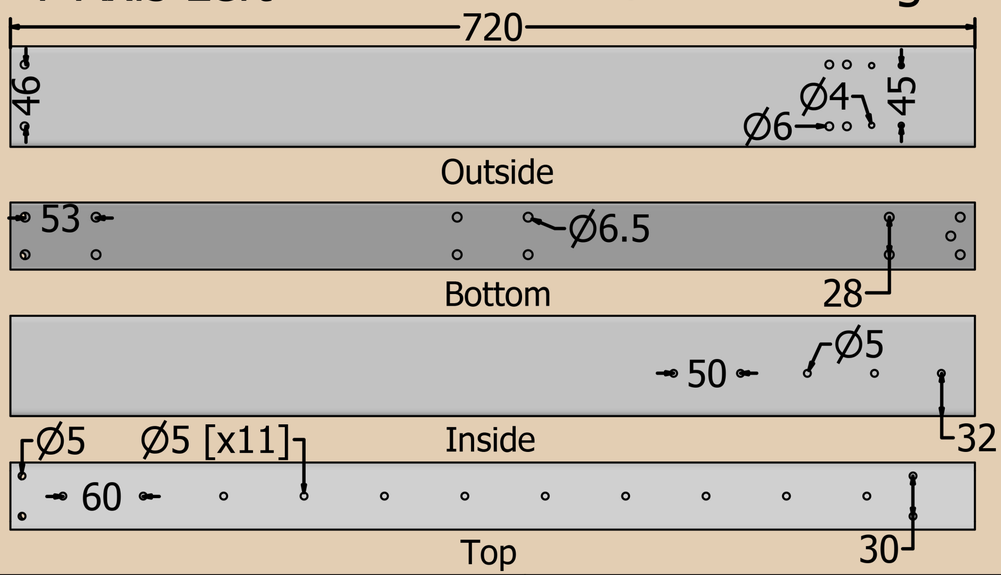

[19]

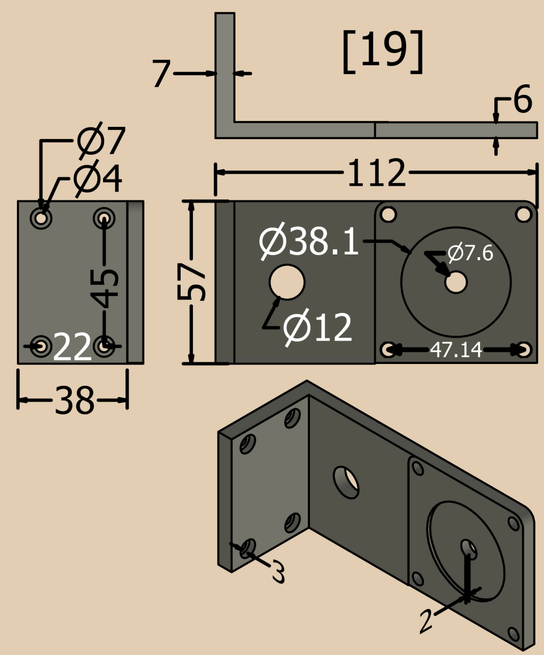

Drawn By: Andrew Reichenbach